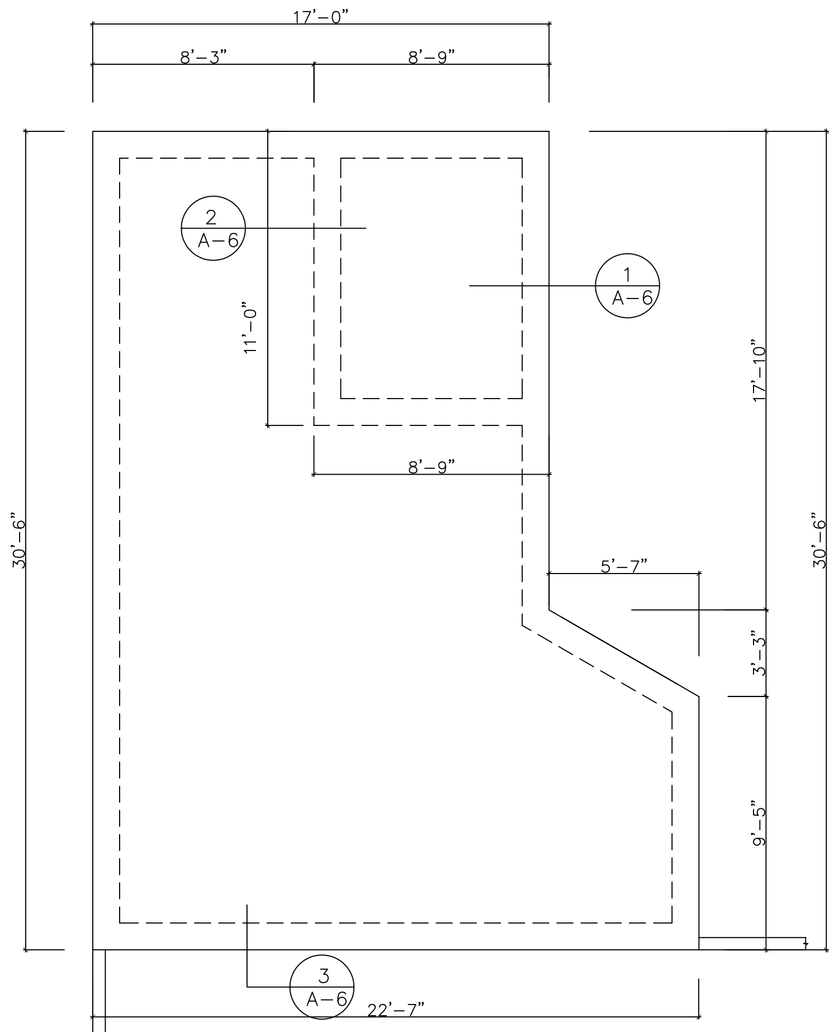

FOUNDATION PLAN
SCALE ¼" = 1'-0"

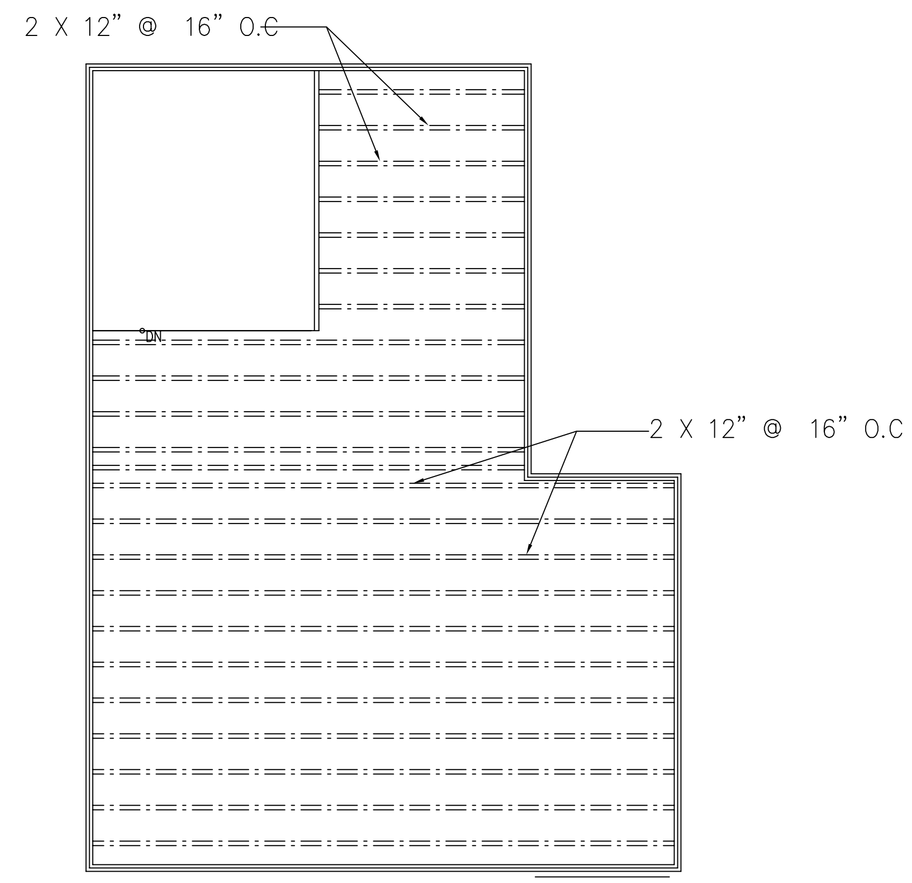

FLOOR FRAMING PLAN
SCALE ¼" = 1'-0"

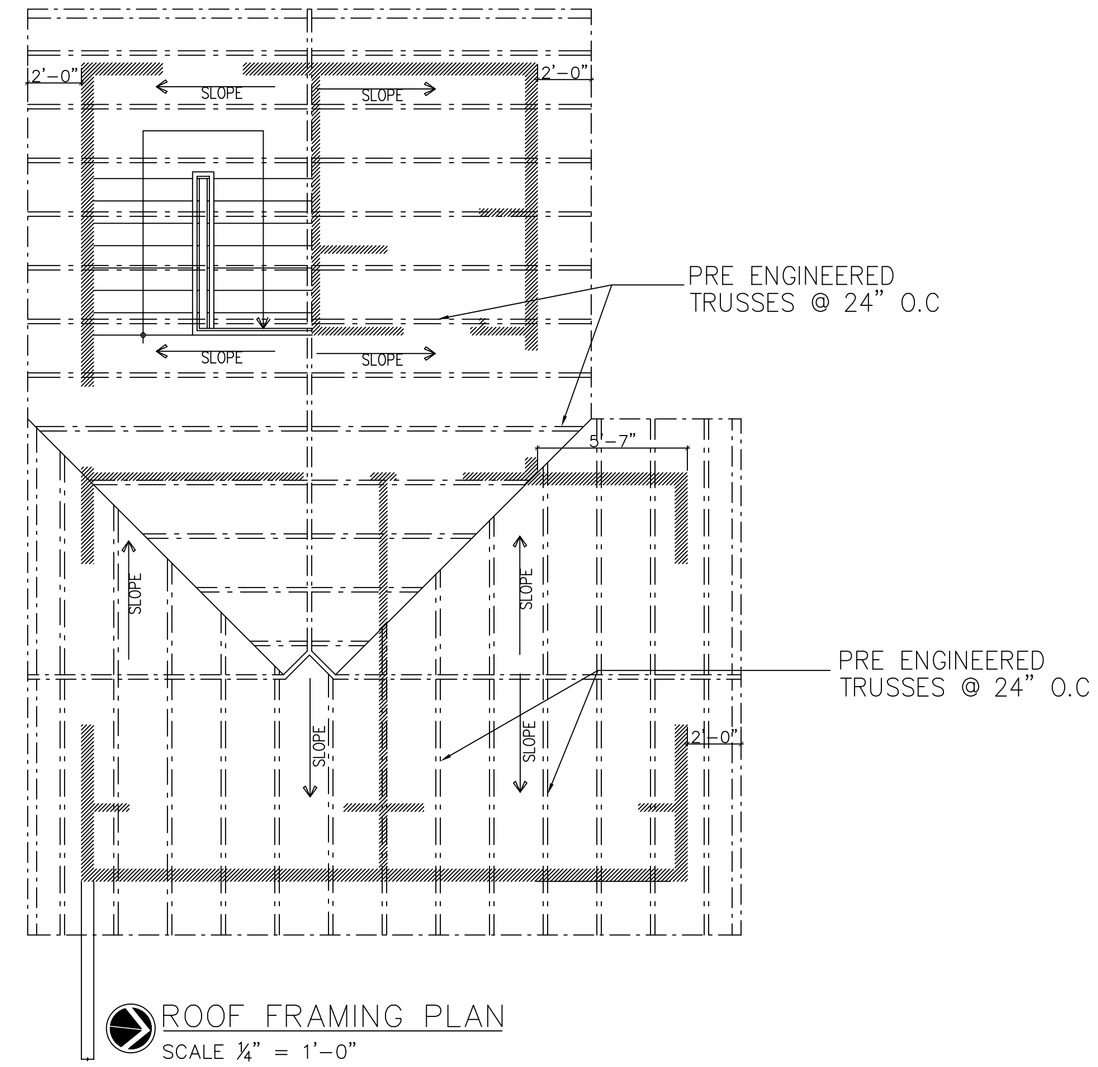

ROOF FRAMING PLAN
SCALE ¼" = 1'-0"

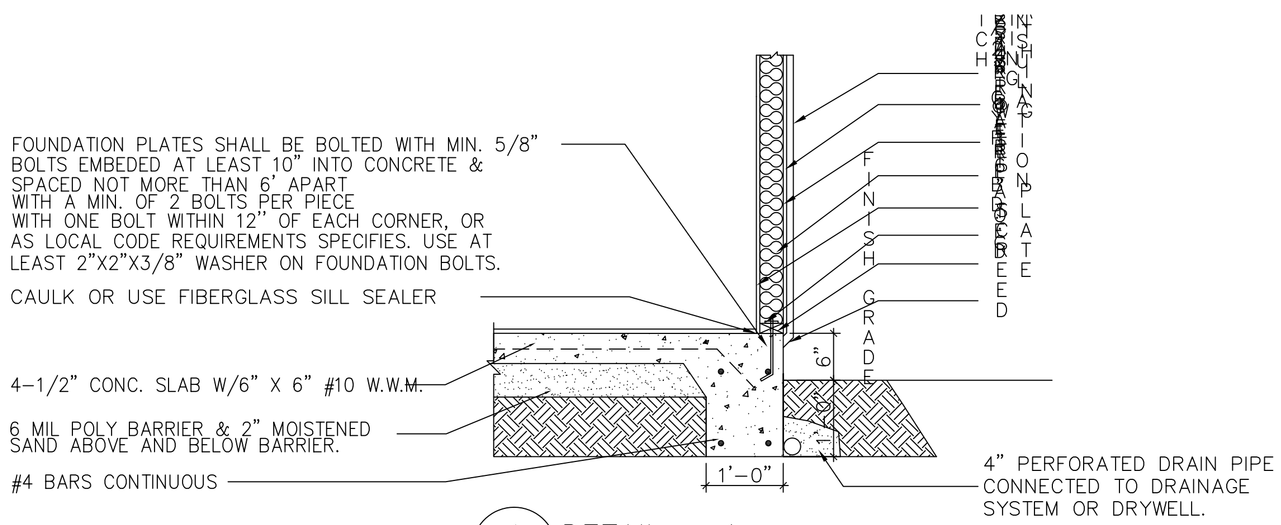

1/A-6 DETAIL – 1
SCALE: 3/4"=1'-0"

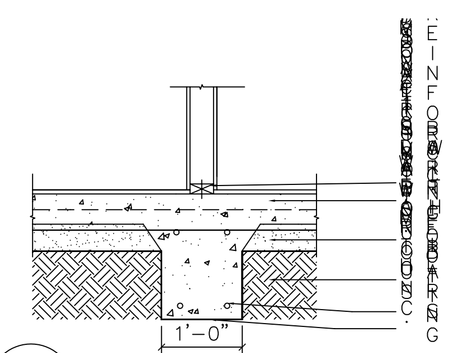

2/A-6 DETAIL – 2
SCALE : 3/4"=1'-0"

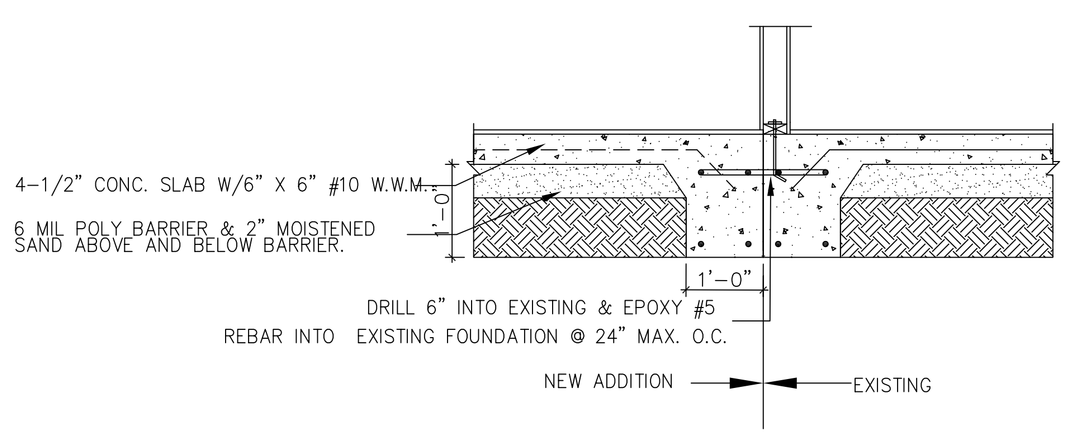

3/A-6 DETAIL – 3
SCALE: 3/4"=1'-0"

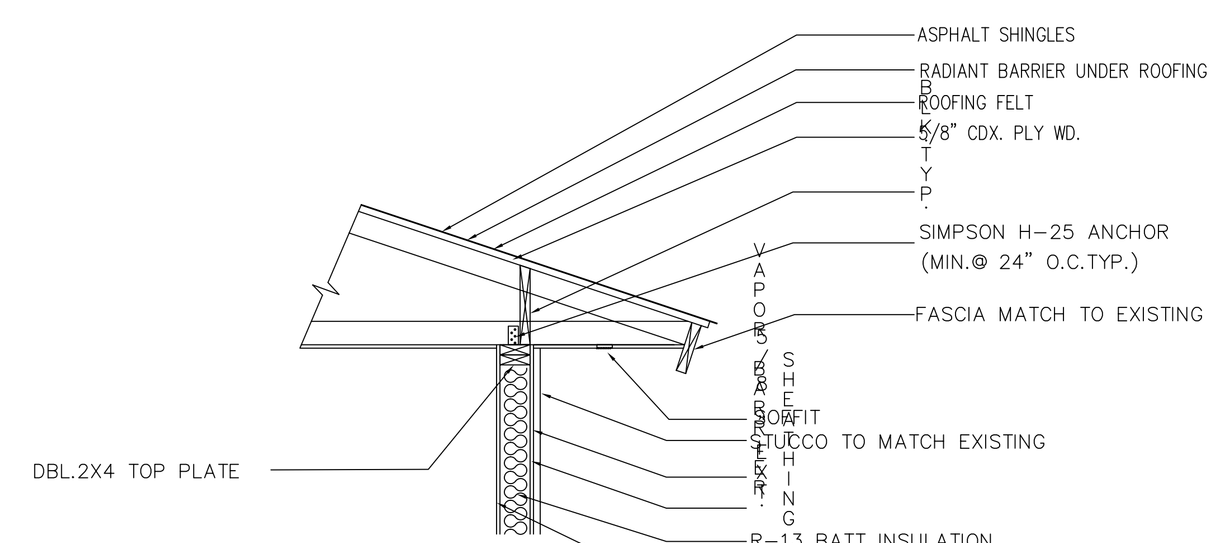

4/A-6 DETAIL – 4
SCALE: 3/4"=1'-0"

Homeplans Houseplans

1778, West Chalet Ave, Anaheim, California. 92804

www.homeplanshouseplans.com

sheet no.
A-7
7 of 7